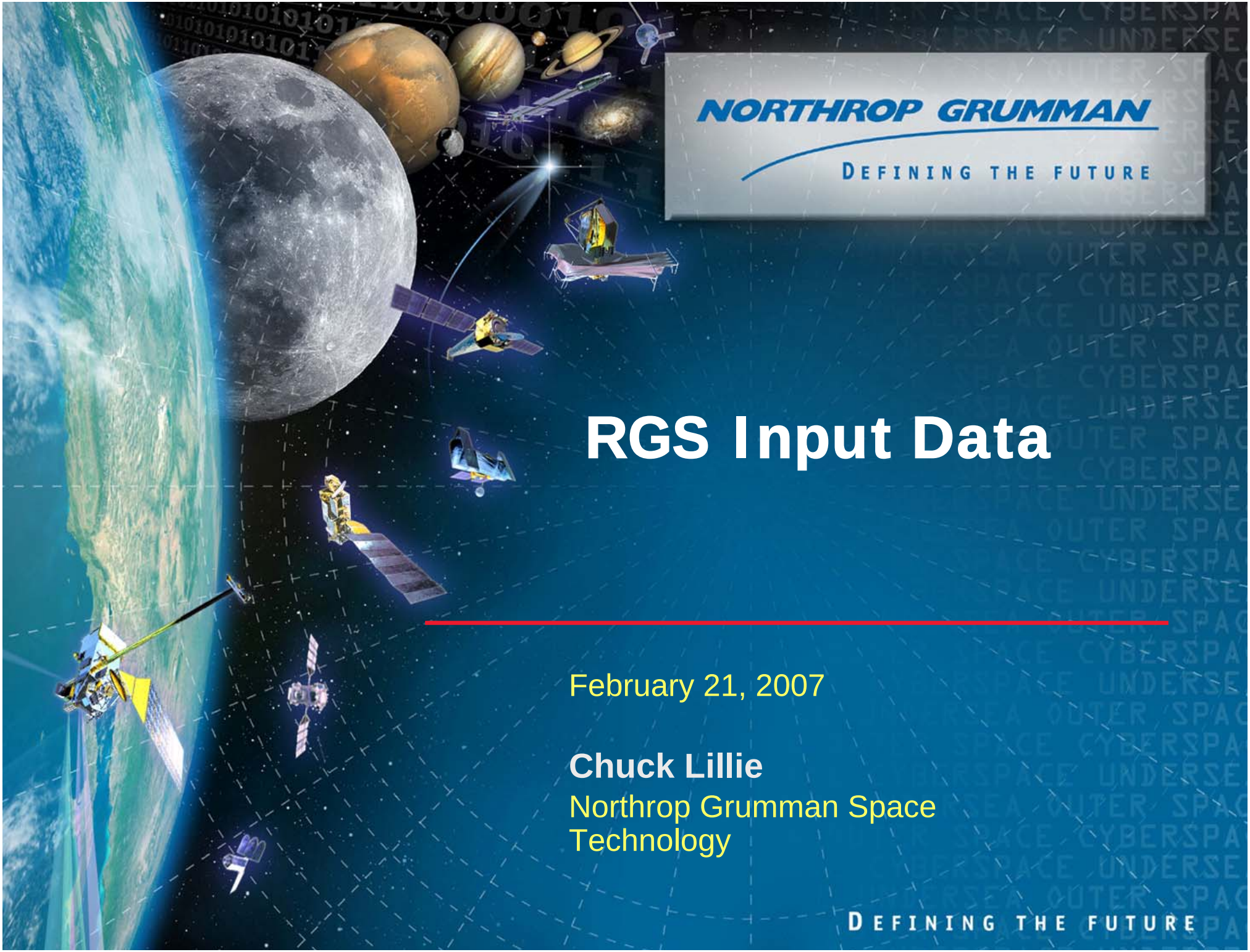

NORTHROP GRUMMAN

DEFINING THE FUTURE

RGS Input Data

February 21, 2007

Chuck Lillie
Northrop Grumman Space Technology

Reflection Grating System Concept

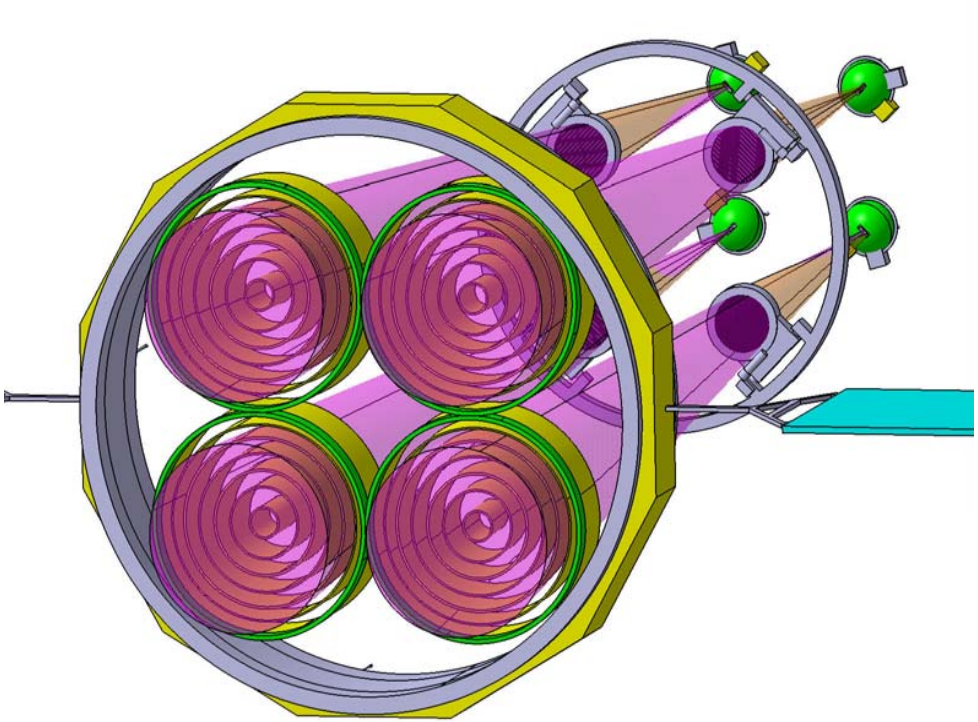

1 to 4 Reflection Grating Spectrometers

4 SXT's on a Single Spacecraft

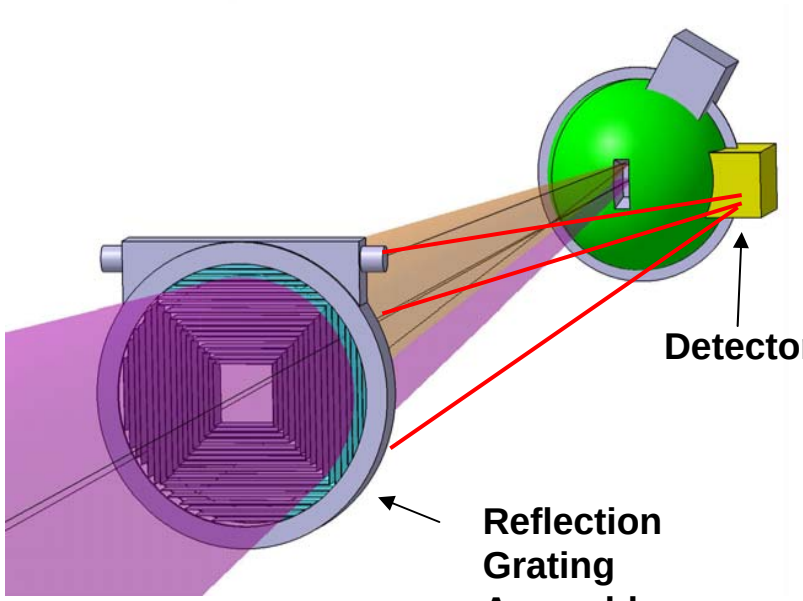

NORTHROP GRUMMAN

Copyright 2005 Northrop Grumman Corporation

Grating Assembly Dimensions

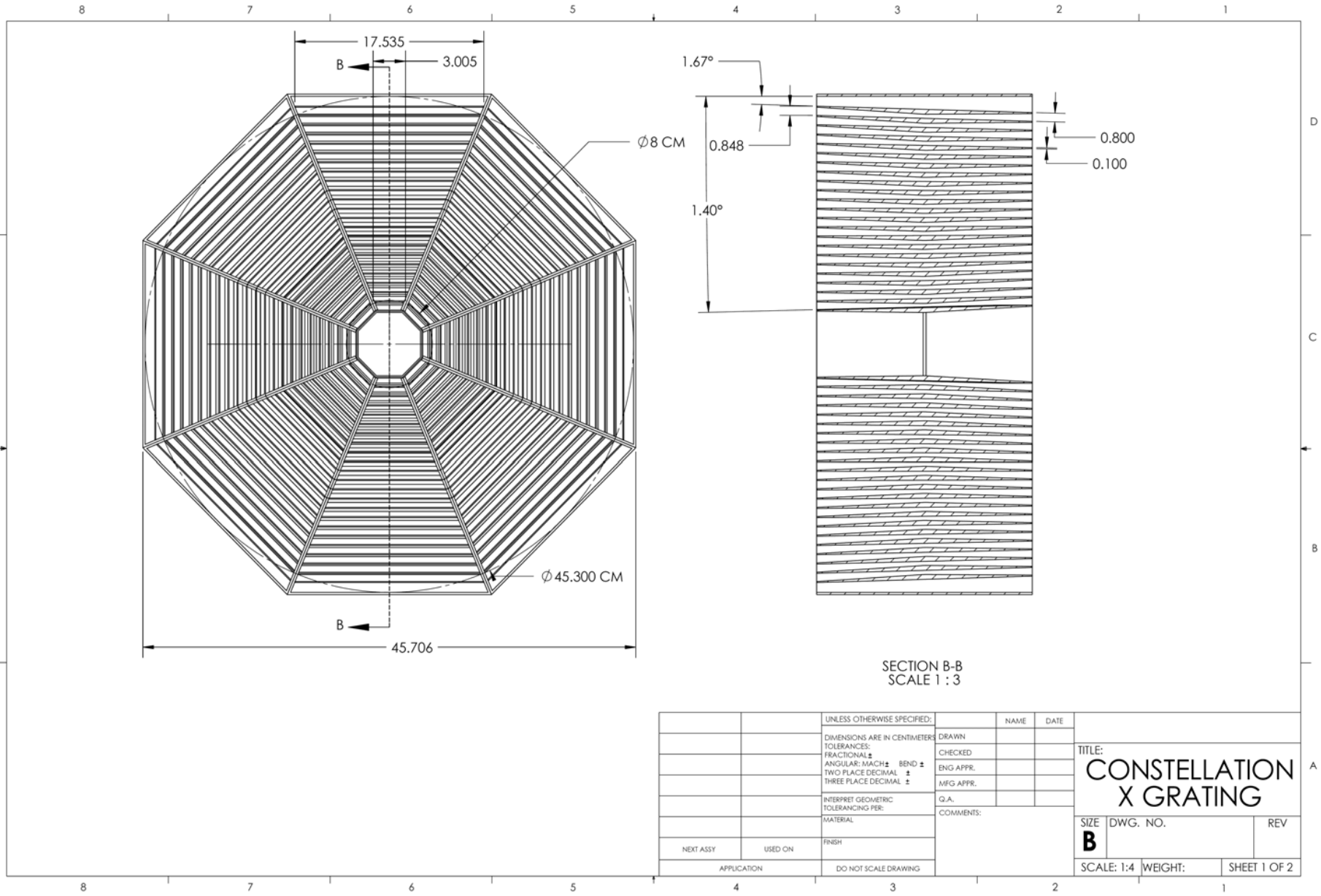

Copyright 2005 Northrop Grumman Corporation

Grating Assembly Dimensions

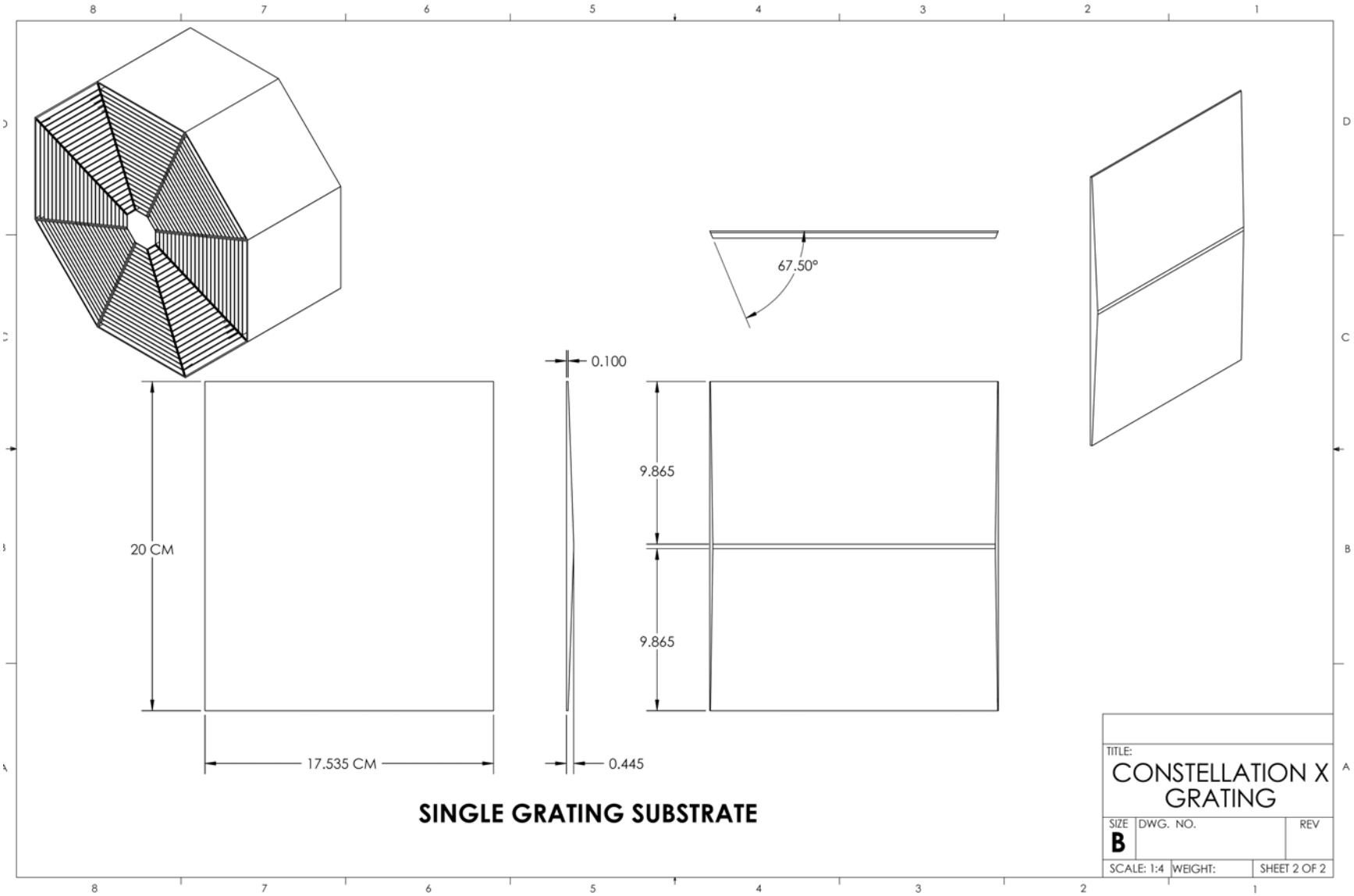

NORTHROP GRUMMAN

Copyright 2005 Northrop Grumman Corporation

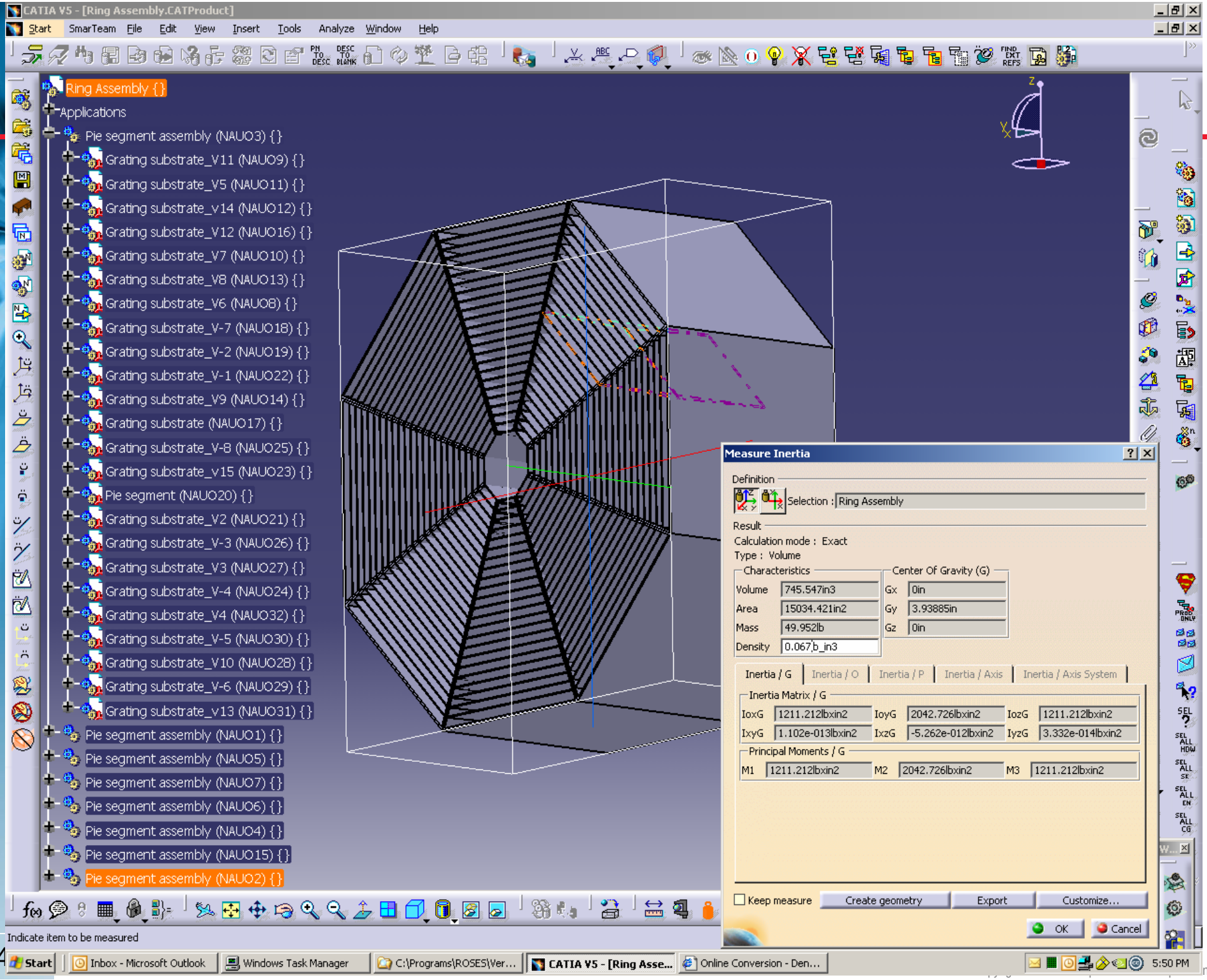
CATIA V5 - [Ring Assembly.CATProduct]
Start SmarTeam File Edit View Insert Tools Analyze Window Help
Ring Assembly {}
Applications
Pie segment assembly (NAUO3) {}
Grating substrate_V11 (NAUO9) {}
Grating substrate_V5 (NAUO11) {}
Grating substrate_v14 (NAUO12) {}
Grating substrate_V12 (NAUO16) {}
Grating substrate_V7 (NAUO10) {}
Grating substrate_V8 (NAUO13) {}
Grating substrate_V6 (NAUO8) {}
Grating substrate_V-7 (NAUO18) {}
Grating substrate_V-2 (NAUO19) {}
Grating substrate_V-1 (NAUO22) {}
Grating substrate_V9 (NAUO14) {}
Grating substrate (NAUO17) {}
Grating substrate_V-8 (NAUO25) {}
Grating substrate_v15 (NAUO23) {}
Pie segment (NAUO20) {}
Grating substrate_V2 (NAUO21) {}
Grating substrate_V-3 (NAUO26) {}
Grating substrate_V3 (NAUO27) {}
Grating substrate_V-4 (NAUO24) {}
Grating substrate_V4 (NAUO32) {}
Grating substrate_V-5 (NAUO30) {}
Grating substrate_V10 (NAUO28) {}
Grating substrate_V-6 (NAUO29) {}
Grating substrate_v13 (NAUO31) {}
Pie segment assembly (NAUO1) {}
Pie segment assembly (NAUO5) {}
Pie segment assembly (NAUO7) {}
Pie segment assembly (NAUO6) {}
Pie segment assembly (NAUO4) {}
Pie segment assembly (NAUO15) {}
Pie segment assembly (NAUO2) {}
Measure Inertia
Definition
Selection : Ring Assembly
Result
Calculation mode : Exact
Type : Volume
Characteristics
Volume 745.547in3
Area 15034.421in2
Mass 49.952lb
Density 0.067lb_in3
Center Of Gravity (G)
Gx 0in
Gy 3.93885in
Gz 0in
Inertia / G
Inertia / O
Inertia / P
Inertia / Axis
Inertia / Axis System
Inertia Matrix / G
IoxG 1211.212lbxin2
IoyG 2042.726lbxin2
IozG 1211.212lbxin2
IxyG 1.102e-013lbxin2
IxzG -5.262e-012lbxin2
IyzG 3.332e-014lbxin2
Principal Moments / G
M1 1211.212lbxin2
M2 2042.726lbxin2
M3 1211.212lbxin2
Keep measure
Create geometry
Export
Customize...
OK
Cancel
Indicate item to be measured
Start
Inbox - Microsoft Outlook
Windows Task Manager
C:\Programs\ROSES\Ver...
CATIA V5 - [Ring Asse...
Online Conversion - Den...
5:50 PM

Chandra Actual Mass Properties

Chandra OTG's	Weight (lbs)	Mass (kg)	Single Unit (kg)
LETG	26.6	12.1	
HETG	31.8	14.5	
OTG Support Structure Assy (Yokes)	77.5	35.2	
Gratings Subtotal	**135.9**	**61.8**	**30.9**
OTG Launch Lock Assembly	26.4	12.0	6.0
OTG Drive Assembly	55.1	25.0	12.5
Mechanisms Subtotal	**81.5**	**37.0**	**18.5**
Grating Assembly Total	**217.4**	**98.8**	**49.4**
Chandra ACIS			
ACIS Detector	36.1	16.4	8.2
Support Assembly	123.8	56.3	28.1
Radiators	13.4	6.1	3.0
Power Supply/Mechanical Controller	33.9	15.4	7.7
ACIS Instrument Total	**207.2**	**94.2**	**47.1**

NORTHROP GRUMMAN

Copyright 2005 Northrop Grumman Corporation

RGS Mass & Power Estimate

Constellation-X RGS	Weight (lbs)	Mass (kg)	Ave. Power (W)	Peak Power (W)	Comments
RGA	50.0	22.7	5.0		Heater
Mechanisms	20.2	9.2		20.0	Normally Off
Detectors Assembly	13.2	6.0			
Support Assembly	17.8	8.1	20.0	40.0	DEA & DPA
Radiators	6.6	3.0			
Power Supply	4.4	2.0	2.0	4.0	
RGS Instrument Total	**112.2**	**51.0**	**27.0**	**64.0**	

NORTHROP GRUMMAN

Copyright 2005 Northrop Grumman Corporation